USER MANUAL

MODEL NUMBER:
FG-10N-2
FG-10NK-2
FG-10NV-2

AND RELATED UNITS

10 Gallon Air Operated Portable Fog Equipment

English (Original Instructions)

READ ALL INSTRUCTIONS BEFORE OPERATING EQUIPMENT

WARNING

Read this manual completely and understand the machine before operating or servicing it.

- Read all instructions before installing or operating unit.
- Always wear appropriate personal protective equipment (PPE) when operating or servicing unit.
- Always follow all chemical safety precautions and handling instructions provided by the chemical manufacturer and Safety Data Sheet (SDS).
- If this unit is modified or serviced with parts not listed in this manual, the unit may not operate correctly.
- Always depessurize unit after use (as described in the After Use Instructions).
- Do not exceed an incoming air pressure of 100 psi (7 bar).
- Do not exceed a fluid temperature of 100˚F (37˚C).
- Always flush the unit with fresh water for 5 minutes when switching from an alkaline to an acid or an acid to an alkaline.
- Never use unit with hydrocarbons or flammable products.
- Only use clean and dry air. Air must be filtered and free of moisture or pump life will be diminished. If needed, install an air dryer before unit.
- Do not use an air lubricator before the unit.
- Never use unit if it is damaged or leaking.

PROTECT THE ENVIRONMENT

Please dispose of packaging materials, old machine components, and hazardous fluids in an environmentally safe way according to local waste disposal regulations.

Always remember to recycle.

*Specifications and parts are subject to change without notice.

READ ALL INSTRUCTIONS BEFORE OPERATING EQUIPMENT

OPTIONS		
	Pump Seal Material	
FG-10N	Santoprene (***standard***)	-2
	Viton (**V**)	
	Kalrez (**K**)	

Add bold option codes to item number as shown. For standard options, no option code is needed.

Examples:

- FG-10N-2 (standard unit with Santoprene pump seals)
- FG-10NV-2 (unit with Viton pump seals)

REQUIREMENTS	
Compressed air requirements	50 psi (3.4 bar) with 7 cfm (198.3 l/min)
Liquid temperature range	40-100˚F (4.4-37˚C)
Chemical compatibility	Chemical products used with this equipment must be formulated for this type of application and compatible with unit materials and pump seals. For more information on chemical compatibility, consult the manufacturer or SDS for your product or contact our customer service department.

SPECIFICATIONS	
Power type	Compressed air
Chemical pickup type	Draws from pre-mixed solution
Number of products unit can draw from	One product
Suction line length/diameter	3/8 in. (9.5 mm) inside diameter
Capacity	12.5 gallons (47.32 liters)
Flow rate*	3.7 gal/hour at each nozzle
Pump seals	Santoprene, Viton, or Kalrez
Droplet size	15 microns at 50 psi
Coverage area**	1 liter of solution will cover approximately 1000 cubic feet (up to system max of 47,320 cubic feet).
Run time from full tank**	Approx. 1.5 hours
Number of nozzles	2 nozzles
Wheel type	Two 10 inch non-marking wheels

*Dilution rates and flow rates given are based on chemical with viscosity of water and factory air pressure settings.

**Area covered and run time may vary based on humidity, air flow, and product used.

READ ALL INSTRUCTIONS BEFORE OPERATING EQUIPMENT

Operation Instructions

Always follow all chemical safety precautions and handling instructions provided by the chemical manufacturer and Safety Data Sheet (SDS).

1. Follow all instructions from chemical manufacturer. Fill the tank with water and the advised percentage of chemical concentrate.
2. Place the unit in the area to be fogged.
3. Ensure the air supply valve (BVB14) is in the closed position, and connect a compressed air line to the air inlet fitting (AP25).
4. Open the air supply valve (BVB14) to activate the unit.
5. Evacuate the area.
6. After the unit has stopped fogging, observe all appropriate safety precautions before reentering area. Close the air supply valve (BVB14) and disconnect the compressed air line from the unit.

After Use Instructions:

1. Flush the unit with fresh water for 5 minutes.
2. Disconnect the air line from the air fitting (AP25).

Maintenance Instructions:

To keep your portable unit operating properly, periodically perform the following maintenance procedures:

- Check the air pump (P56/P56K/P56V) for wear and leaks.
- Inspect hoses for leaks or excessive wear. Make sure all hose clamps are in good condition and properly secured.
- Check the suction tube and screen for debris and clean as needed.
- Drain compressor tank on a regular basis to ensure proper operation of pump.

Troubleshooting Instructions:

- If air passes through the pump (P56/P56K/P56V) without cycling, the pump needs to be replaced.
- Check the chemical suction line and strainer for debris or damage. Clean or replace as needed. To prevent damage to the unit, the strainer (STR38-IL) must always be used.
- Check for proper air pressure on air gauge (AG100). Air regulator (R14) is factory set at 50 psi (3.4 bar).
- If the unit foams at a reduced pressure:
  - Check the air compressor supplying the unit. If the pressure is less than 40 psi, turn the foam unit off until the compressor can catch up.
  - If the air supply is 50 psi (3.4 bar) or above, check the AG100, which should read near 50 psi (3.4 bar). If the AG100 is more or less than 50 psi (3.4 bar), adjust the pressure by turning the knob on the top of the air regulator (R14).

READ ALL INSTRUCTIONS BEFORE OPERATING EQUIPMENT

TANK ASSEMBLY
ITEM NUMBER: TANK-10N-A

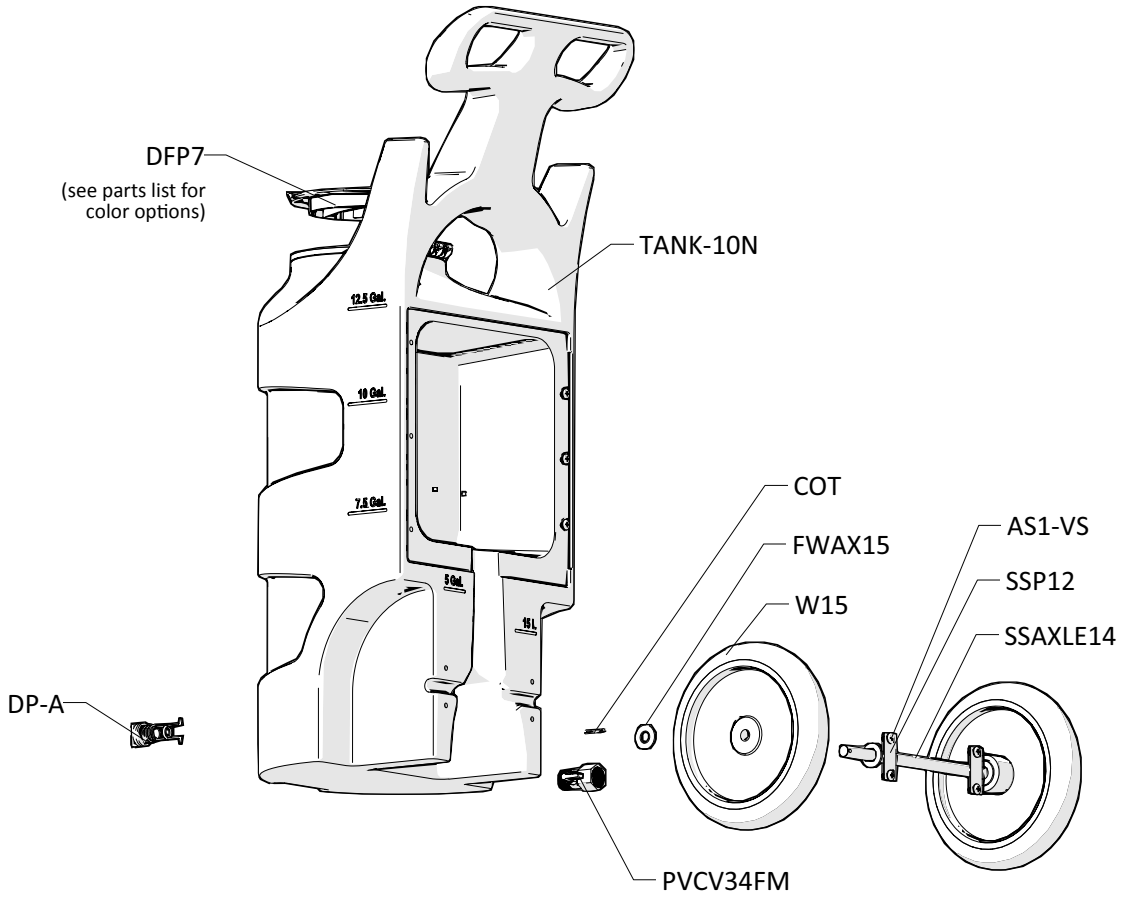

OPTIONAL COMPONENTS

AIR HOSE ASSEMBLY
ITEM NUMBER: AH30

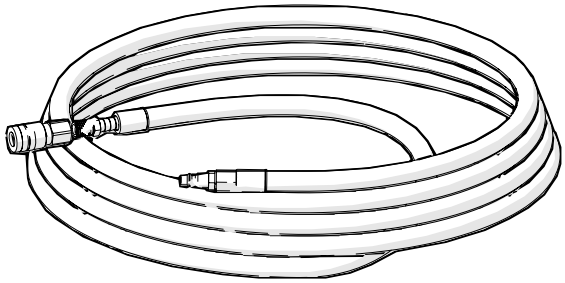

WATER SEPARATOR
ITEM NUMBER: WS-20CFM

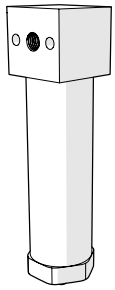

READ ALL INSTRUCTIONS BEFORE OPERATING EQUIPMENT

Plate - Inside View

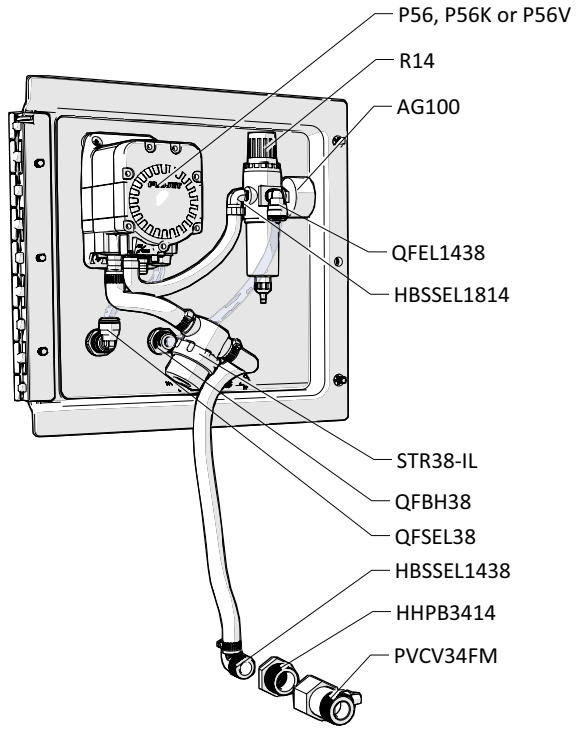

Plate - Back View

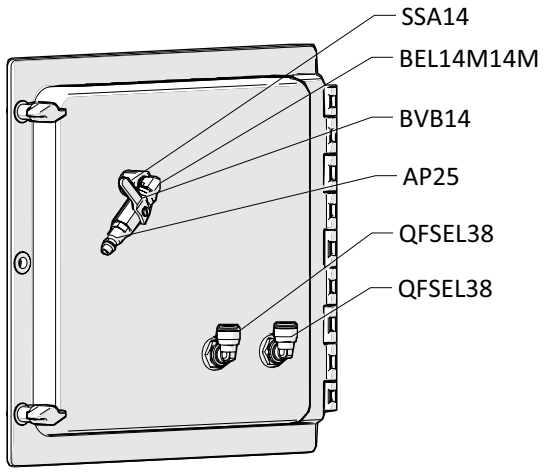

FOG NOZZLE ASSEMBLY

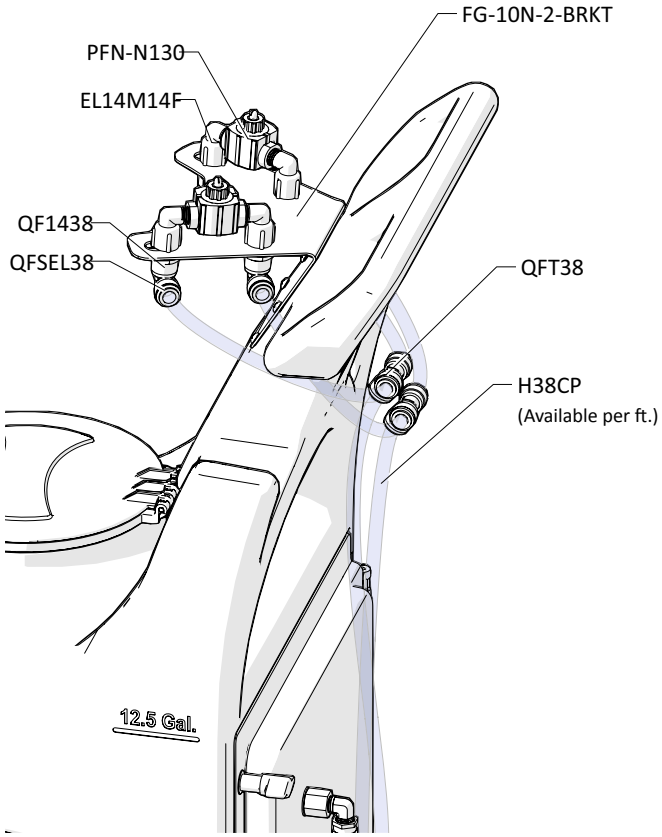

READ ALL INSTRUCTIONS BEFORE OPERATING EQUIPMENT

ITEM NUMBER	DESCRIPTION
AG100	1.5 INCH DRY MODEL 20 DUAL SCALE GAUGE
AH30	30 FT. AIR HOSE WITH QUICK CONNECT FITTINGS
AP25	PLUG 1/4 NPTM AIR FITTING - BRASS
AS1-VS	1/4-20 X 1/2 PHIL TRUSS MACH SCREW 19-8 W/516 ORANGE VIBRASEAL PATCH
B103234	10-32 X 3/4 PHIL TRUSS MACH SCR 18-8
B8X58	8-15 X 5/8 inch PHIL FLAT TY-A 316 S.S.
BEL14M14M	BRASS ELBOW 1/4in MPT X 1/4in MPT
BPS-58SO	Back Panel Screw - 5/8 inch with Stand Off
BPS-SSR	1/4 INCH PUSHNUT BOLT RETAINER STAINLESS STEEL
BVB14	AIR INLET VALVE - VA BRS 025-4F4F-BT, NICKEL
COT	1/8 X 1 COTTER PIN 18-8 S/S
DFP7	7 INCH HINGED CAP ASSEMBLY - INCLUDES BLACK CAP, LID FLANGE AND HINGE PIN
DFP7-C	*7 INCH FILL CAP POLYPRO BLACK*
DFP7-F	*7 INCH TANK LID FLANGE POLYPRO*
DFP7-PIN	*HINGE PIN FOR DFP7-C & DFP7-C*
DFP7-C-BL	7 INCH FILL CAP POLYPRO BLUE PANTONE
DFP7-C-GN	7 INCH FILL CAP POLYPRO GREEN PANTONE
DFP7-C-RD	7 INCH FILL CAP POLYPRO RED PANTONE
DFP7-C-YL	7 INCH FILL CAP POLYPRO YELLOW PANTONE
DP-A	DRAIN PLUG ASSEMBLY FOR TANK-10N TANK-20N
DP	FRONT DRAIN PLUG FOR PORTABLE UNIT POLYPRO
DP-G	FKM SQUARE CUT DRAIN PLUG GASKET
EC14-2	OETIKER CLAMP 13.8
EL14M14F	1/4 FEM PIPE X 1/4 M PIPE ELBOW
FG-10N-2-BRKT	BRACKET FOR FG-10N-2
FMS1034	10 X 3/4in PHIL SHEET METAL SS SCREW
FWAX15	FLAT AXLE WASHER
FWLG14	.569 ID X 1.28 OD X .08 THICK FLAT WASHER SS 18-8
H38B-F	3/8 INCH BLUE HOSE-HYBRID TPE-Available per ft.
H38CP	3/8IN OD POLYETHYLENE TUBING - NATURAL
HBBEL1414	HOSE BARB 1/4 MPT X 1/4 BARB ELBOW
HBSSEL1438	STAINLESS HOSE BARB ELBOW 1/4 INCH NPT X 3/8 HOSE BARB
HHBB1418	HEX HEAD BUSHING 1/4 MPT X 1/8 FPT
HHPB3414	HEX HEAD POLY REDUCER BUSHING 3/4 X 1/4
P56	5700 PUMP WITH SANTOPRENE SEALS - INCLUDES HOSE BARBS, AIR FITTING, AND AIR PORT
P56K	5700 PUMP WITH KALREZ SEALS - INCLUDES HOSE BARBS, AIR FITTING, AND AIR PORT
P56V	5700 PUMP WITH VITON SEALS - INCLUDES HOSE BARBS, AIR FITTING, AND AIR PORT
20756103B	*Polypro G57 Air Port x HB Straight, w/ Viton o-ring*
HB14P	*1/4in BRASS HB AIR FITTING /G57/P56*
HB5638	*HOSE BARB FOR P56 PUMP*
HB5638K	*HOSE BARB FOR P56K PUMP*
HB5638V	*HOSE BARB FOR P56V PUMP*
PFN-N130	PNEUMATIC FOG NOZZLE - POLYPROPYLENE AND KYNAR TIP - 3.7 GAL/HR PER NOZZLE
PLPF-B	BLANK PORTABLE FOAMER PLATE WITH HINGE W/O HOLES
PLPF-PIN	302 STAINLESS PORTABLE PLATE HINGE PIN
PVCV34FM	PVC VALVE 3/4in FPT X 3/4in MPT
QF1438	MALE CON. 3/8in TUBE X 1/4in MPT - POLYPROPYLENE
QF5638	3/8in QF PUMP FITTING / G57
QFBH38	BULKHEAD 3/8in TUBE POLYPROPYLENE
QFEL1438	FIXED ELBOW 3/8in TUBE X 1/4in MPT - POLYPROPYLENE
QFSEL38	PLUG-IN ELBOW 3/8in TUBE X 3/8in POLYPROPYLENE
QFT38	UNION TEE 3/8in TUBE POLYPROPYLENE
R14	1/4 NPTF REGULATOR W/ FILTER-NO GAUGE
SSA14	SS304 MALE/FEMALE ADAPTOR 1/4 NPT X 1/4 NPT
SSAXLE14	14 ½” long with the 5/8” diameter bar & 2 through holes with countersinks beveled ends
SSC38	WORM GEAR CLAMP, S/S (.25-.63)
SSP12	STAINLESS STEEL AXLE PLATE - 2.5 inch X 1 inch - 2 HOLE
STR38-IL	IN LINE STRAINER 3/8 BARB 20 MESH 304 STAINLESS EDPM GSKT
TANK-10N	10 GALLON NATURAL TANK
TW916	1/2 INT TOOTH L/W 410SS
W15	NONMARKING WHEEL FOR PORTABLE UNITS
WS-20CFM	TSUNAMI WATER SEPARATOR 20 CFM